GDS 404

1-4 CHANNEL GAS ALARM

GDS TECHNOLOGIES

Specification Sheet
ref C467Cv4

- Versatile System Configuration
- Flammable, Oxygen and Toxic Gases
- 1 to 4 sensors
- Plug in sensor channel cards
- Two alarm stages
- Selectable alarm relays
- Analogue 4-20mA output
- Delay to alarm option

The GDS 404 has been designed with features that provide an effective response to the detection of gas hazards in a wide range of environments, from commercial premises through to heavy industrial applications requiring hazardous area sensing. Typical monitor locations are public buildings, boiler plant rooms, swimming pools, water treatment works, H&V control systems, manufacturing and processing plants.

Sensor points

1 ~ 4

Type

Infra-red, Electrochemical, Catalytic, Semiconductor, PID

Measurements

Combustible Gas - L.E.L., % vol, ppm
Toxic Gas - ppm, % vol
Oxygen - % vol Depletion/Enrichment
Any 4~20mA input signal

Power Supply

230/115v AC or 24v DC and specials

Power Consumption

12 watts - full alarm

Indicators

- Power - Green L.E.D
- Mains Fail - power indicator change green to amber
- Alarms - Red L.E.D.s
- Fault - Amber L.E.D
- Digital Display - 31/2 Digit - gas readout
- Sensor channel selection indicator - Amber L.E.D
- System test - Alarm L.E.D.s flashing
- Alarm Relay Inhibit - Fault L.E.D on

Outputs

- Analogue output 4~20mA into 200 ohms max load

Common Relays - user selectable

- High alarm RL2 - D.P.C.O. normally energised or de-energised - factory set de-energised
- Latched or unlatched - factory set latched
- Low alarm RL1 - D.P.C.O. normally energised or de-energised - factory set de-energised
- Latched or unlatched - factory set latched
- Fault alarm RL3 - S.P.C.O. normally energised or de-energised - factory set de-energised
- Latched or unlatched - factory set latched
- Global Alarm Relay RL4 - S.P.C.O. changes on all alarms and is resettable at all times.

Channel Relays

- High and low alarm S.P.C.O. normally energised or de-energised
- - factory set de-energised
- Latched or unlatched - factory set latched
- All contacts rated 3A/230v AC

E: sales@gds-technologies.co.uk T: 0113 286 0166 F: 0113 287 8178
GDS TECHNOLOGIES LTD | FUSION POINT | ASH LANE | GARFORTH | LEEDS | LS25 2GA | UK
www.gds-technologies.co.uk

Audible Alarm

Permanent mute option.
Lo, Hi, Fault alarms

Alarm Settings

- Digital Setting (fully adjustable between zero and fullscale)
- Delay to alarm T1 - 10 seconds, T2 - 30 seconds, T1 + T2 - 10 minutes

Sensor Inputs

- Bridge type 3 wire mV input
- 4~20mA

Sensor Cable

- 3 core 1.5mm screened < 1.5km

Miscellaneous

- EMC approvals EN50270 Marine EN60945
- Enclosure - cable entry - bottom/rear
- Operating temperature -10 to +50°C
- Relative Humidity 0 - 90%
- Protection IP52 - option IP65 overhousing
- Dimensions 314W x 265H x 75Dmm
- Weight 3.6kg
- Optional backup battery
- System/lamp test
- Remote Accept/Reset
- Alarm isolate during service - inhibit

Sensors

XDIwin (Exd)

XDI (Exd)

30J (safe area)

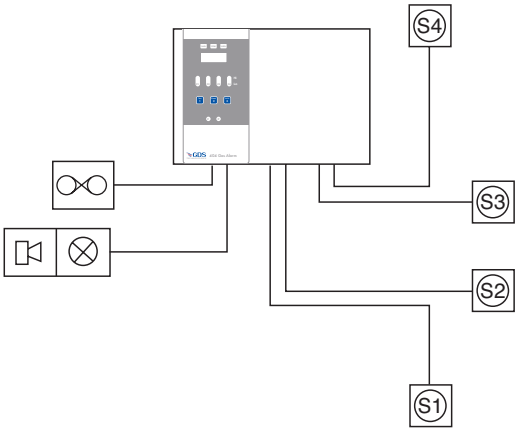

Sensor Accessories

Collector Cone & Universal Fitting
Universal fitting (Test Gas Applicator/Spray Deflector)
Water Shield - stainless steel
Flow Block - nylatron
Flow Block - stainless steel
Duct Mount Kit
Detector Head Weather Shield
F1 Sensor Thermal Jacket

C808

This document is not contractual and the equipment specification may be modified at any time without prior notice.

E: sales@gds-technologies.co.uk T: 0113 286 0166 F: 0113 287 8178
GDS TECHNOLOGIES LTD | FUSION POINT | ASH LANE | GARFORTH | LEEDS | LS25 2GA | UK
www.gds-technologies.co.uk